HAYWARD®

FlowControl SYSTEMS

Series EJM Electric Actuators

For All Sizes of Ball Valves and Butterfly Valves up to 24"

The Best Actuator for Most Applications

EJM Electric Actuators have been designed to meet the requirements of most applications without the need for extra cost, add-on options. These rugged, heavy-duty actuators come standard with features that cost extra on other actuators. These include two extra auxiliary limit switches for end of travel indication, heater and thermostat for cold or high humidity applications, a self-locking gear train to prevent drifting at the end of the actuation cycle and a manual override. Now, cost-sensitive applications can take advantage of an exceptional electric actuator with the EJM Series.

Rugged, Reliable Cost Effective Design

EJM Electric Actuators have been designed to endure the most demanding applications and provide years of trouble-free service at a cost effective price. The heavy duty gear drive train is built to withstand stalled conditions without gear failure. The NEMA 4/4X aluminum alloy housing is dry powder coated to stand up to harsh environmental conditions encountered in many applications. Motor burn out is prevented by reliable thermal overload protection. These are just a few of the features built into every EJM Actuator to insure a long, trouble-free service life.

Options for Unique Applications

Applications with very special requirements can take advantage of the EJM Actuator by utilizing a choice of options. Positioners are available for throttling or modulating applications as are feedback potentiometers that signal the valves position. Several different voltage options are available as well as 3-phase motors on 800 in-lb actuators and larger.

Features

- 2 Auxiliary Limit Switches
- Heater with Thermostat
- NEMA 4/4X Housing
- Position Indicator
- Manual Override
- Self-Locking Gear Train
- Permanently Lubricated
- Thermal Overload Protection
- CE and CSA Approved
- ISO 5211 Mounting Base

Options

- Positioners
- Voltage Options
- 3 Phase Motors (On/Off, 800 in-lbs and Larger Models Only)
- Feedback Potentiometer
- Control Stations

Technical Information

Actuator Specifications

Model	EJM2S2T	EJM3S2T	EJM8S2T	EJM13S2T	EJM35S2T	EJM130S2T
Torque - lbs	150	300	800	1300	3500	13,300
Housing	Aluminum Alloy, Dry Powder Coated					
Conduit Size - inches	1/2”					
Std. Duty Cycle on/off	25%					
ISO 5211 Mount	FO3/FO5		FO7		F10	F14
Output Shaft	.55” Sq FEM, .59” Deep		.86” Sq FEM, 1.18” Deep		1.45” Sq FEM, 1.57” Deep	1.40” Rnd. Keyed FEM 2.4” Deep
Cycle Time 90º seconds	8	12	15	22	22	46
Std Motor Voltage	50/60 Hz, 115 VAC, 1 Phase, PSC					
Max Current Amps @ 120 VAC	.60		1.8		3.6	10.0
Enclosure	NEMA 4 / 4X					
Brake	Self-Locking Gear Train					
Manual Overide	Standard (Handwheel Included on 800 in lb Models and Larger)					
Operation	Reversing					
Weight-lbs	5		20		40	52

EJM Series Dimensions / Wiring Diagram

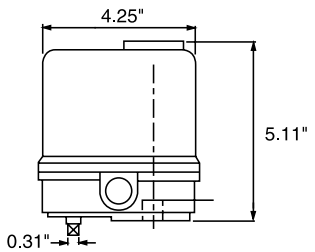

EJM2S2T/EJM3S2T

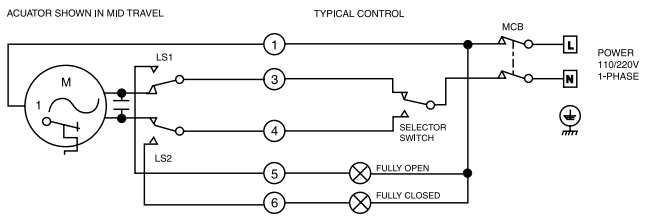

Wiring Diagram

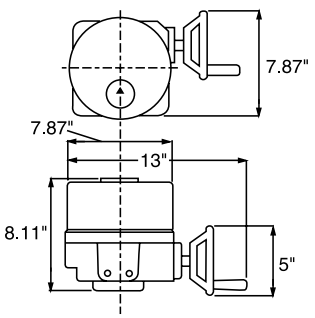

EJM8S2T/EJM13S2T

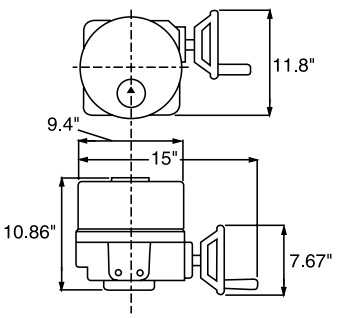

EJM35S2T

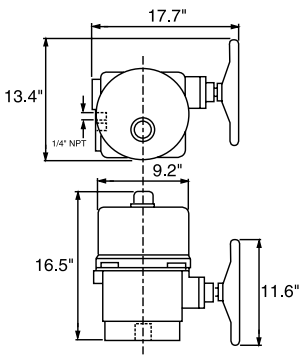

EJM130S2T

Ball Valve Selection Chart*

Valve Size	True Union Ball Valve	Three Way Ball Valve
1/2" to 2"	EJM2S2T	EJM2S2T
2-1/2" to 6"	EJM3S2T	EJM8S2T

*Actuator size selections based on clear water @ 70°F.

Butterfly Valve Selection Chart*

Valve Size	Butterfly Valve
1-1/2", 2", 3"	EJM3S2T
4", 6"	EJM8S2T
8"	EJM13S2T
10", 12"	EJM35S2T
14", to 24"	EJM130S2T

HAYWARD®

Hayward Industrial Products, Inc.
One Hayward Industrial Drive, Clemmons, NC 27012
Tel: 1-888-429-4635 (1-888-HAYINDL) • Fax: 1-888-778-8410
E-mail: industrial@haywardnet.com
Web Site: http://www.haywardindustrial.com

MC-6-EJM Printed in U.S.A.